ITEM #

MODEL #

NAME #

SIS #

AIA #

Planetary Mixers
Stainless Steel Planetary Mixer for Bakery, 40 lt. - Electronic + hub

600173 (DMBE40XB)

40 lt stainless steel planetary mixer, bowl detection device and SOLID BPA free safety screen, with 3 fixed speeds and variable speed. Equipped with spiral hook, paddle and whisk. Suitable for bakery preparations

Short Form Specification

Item No.

Floor model, suitable for all kneading, blending and whipping operations. Stainless steel reinforced body for heavy duty use with 18/8 (AISI 302) 40 litre capacity stainless steel bowl. Powerful asynchronous motor (2200 W) with 3 fixed speeds (40,80,160 rpm) and electronic variable speed (from 30 to 175 rpm). Water proof (IP55) and flat touch button control panel with timer from 0-59 min. Removable/ transparent solid safety screen - made of a bisphenol-A free (BPA) copolyester. Removable and dismantled solid safety screen and stainless steel wire structure. Bowl detection device allows the mixer to switch on only when the bowl and the safety screen are properly installed and positioned together. Kneading: speed 1 or 2 with hook; Blending: speed with 2 paddle; Whipping: speed 3 with whisk. Supplied with 3 tools; spiral hook, paddle and reinforced whisk.

APPROVAL:

Main Features

- Professional beater mixer designed to withstand the strong demands of bakery and pastry making.
- Delivered with:
  - Spiral Hook, Paddle, Reinforced Whisk and Mixing Bowl for 40 lt
- Kneading speed: "1" with hook.
- Mixing speed: "2" with paddle.
- Emulsifying speed: "3" with whisk.
- Raising and lowering of the bowl controlled by lever with an automatic locking of the bowl when in the raised position.
- Waterproof touch button control panel with timer, speed setting and display.
- Maximum capacity (flour, with 60% of hydration) 10 kg.
- Solid BPA-free safety screen, covering the stainless steel wire one, limits the flour and unsafe dust particles when used in bakery and pastry preparation.
- Removable chute to add ingredients while working available as standard.
- Bowl detection device allows the mixer to switch on only when the bowl and the solid safety screen are properly installed and positioned together.

Construction

- Body entirely in stainless steel.
- Reinforced body, feet and transmission for heavy duty operations.
- 302 AISI Stainless steel bowl - 40 lt. capacity.
- Electronic speed variator (10 speeds available from 30 to 175 rpm)
- 3 fixed speeds: 40, 80 and 160 rpm.
- Water protected planetary system (IP55 electrical controls, IP23 overall machine).
- Power: 2200 watts.
- The solid safety screen and the stainless steel wire structure are both removable and dismantled for cleaning and are dishwasher safe.
- Adjustable feet to perfect stability.

Included Accessories

- 1 of Bowl 40 lt for MB/ MBE models — PNC 650128
- 1 of Spiral Hook 40 lt for MB/MBE models — PNC 653092
- 1 of Paddle 40 lt for MB/MBE models — PNC 653093
- 1 of Whisk 40 lt, reinforced (for heavy duty use) for MB/MBE planetary mixers — PNC 653127

Optional Accessories

Stainless Steel Planetary Mixer for Bakery, 40 lt. - Electronic + hub
Planetary Mixers

• 20 lt reduction kit (bowl, spiral hook, paddle, whisk) for 40 lt planetary mixers - bakery models	PNC 650126	❑
• Bowl 40 lt for MB/MBE models	PNC 650128	❑
• Spiral Hook 40 lt for MB/MBE models	PNC 653092	❑
• Paddle 40 lt for MB/MBE models	PNC 653093	❑
• Fine Whisk 40 lt for MB/MBE planetary mixers (for emulsions)	PNC 653094	❑
• Whisk 40 lt, reinforced (for heavy duty use) for MB/MBE planetary mixers	PNC 653127	❑
• Bowl trolley for 40/60/80 lt planetary mixers	PNC 653585	❑

The company reserves the right to make modifications to the products without prior notice. All information correct at time of printing.

Planetary Mixers
Stainless Steel Planetary Mixer for Bakery, 40 lt. - Electronic + hub

Front

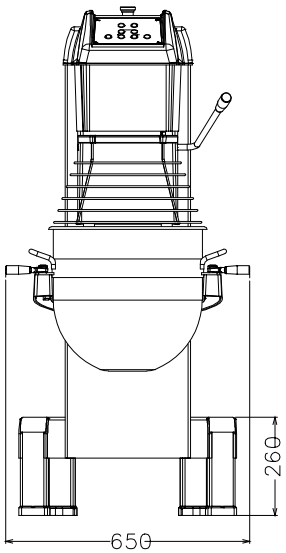

Side

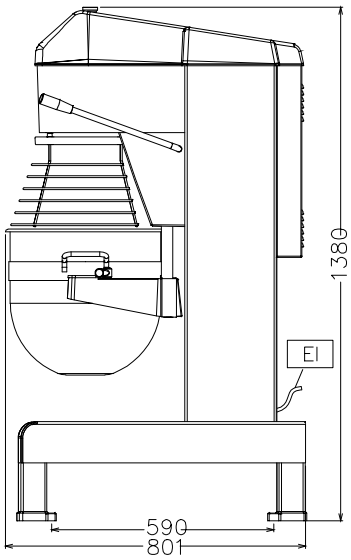

EI = Electrical inlet (power)

Top

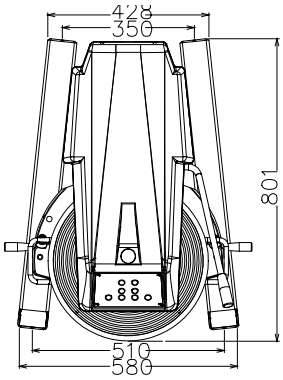

Electric	
Supply voltage:	
600173 (DMBE40XB)	200-240 V/1N ph/50/60 Hz
Electrical power max.:	2.2 kW
Total Watts:	2.2 kW
Capacity:	
Performance (up to):	ISO 9001; ISO 14001 kg/ Cycle
Capacity:	40 litres
Key Information:	
External dimensions, Width:	655 mm
External dimensions, Depth:	850 mm
External dimensions, Height:	1370 mm
Shipping weight:	195 kg
Cold water paste:	ISO 9001; ISO 14001 kg with Spiral hook
Egg whites:	70 with Whisk

The company reserves the right to make modifications to the products without prior notice. All information correct at time of printing.